RoHS

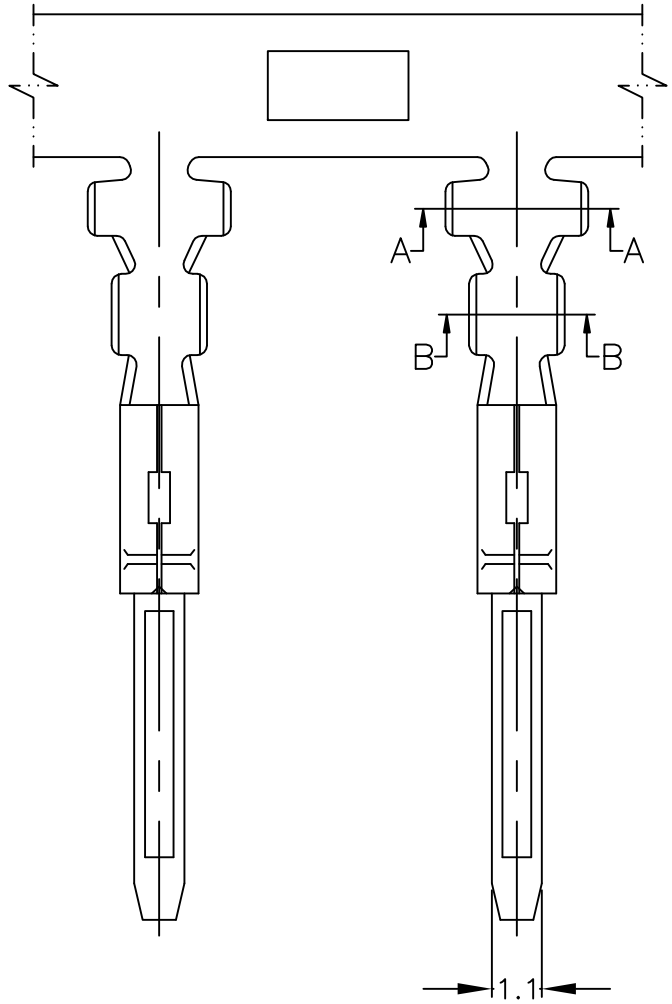

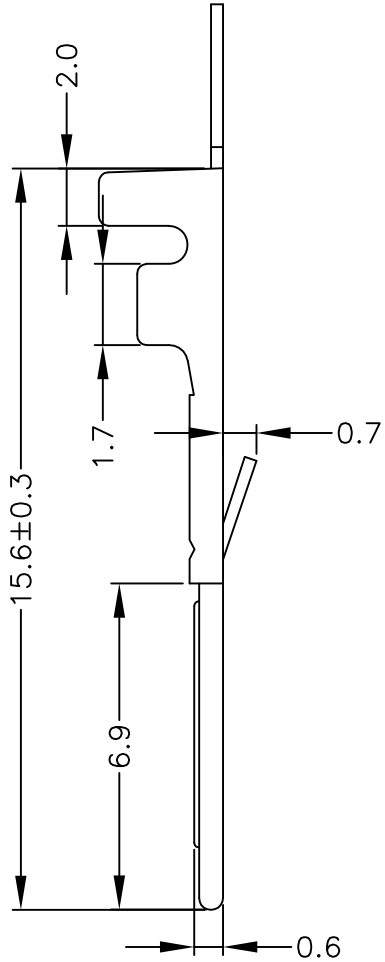

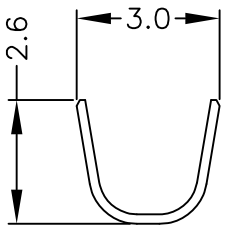

A–A

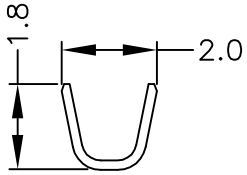

B–B

Part No.	Wire Range	Insulation O.D.	Material	Finish	Q'ty/Reel
C2509T0B–2	AWG #22~#28	1.90mm(Max)	Brass	Tin–Plated	5,000

Note: e–Stamping before Tin–plated or Gold–flash

REVISION RECORD

REV.	DATE	DESCRITION	CHANGE	APPROVE

TOLERANCE						
.0±0.25 0.00±0.15 0.000±0.10	DRAW	杨恺	SCALE	1:1	UNC® 耀聯電子科技有限公司 UNC Electronic & Technology Co., Ltd	
	DESIGN	杨恺	UNIT	mm		
	CHECK	吴守春	SIZE	A4	PART NO.	C2509T0B–2
	APPROVE	吴守春	SHEET	1/1	DESCRITON	2.50mm PITCH CRIMP TERMINAL–MALE
	VERSION	JD1	PROJ.		DRAWING NO.	

TEL:0769–87299998 FAX:0769–87299968 E–Mail:uniconn@163.com WEB:http://www.uniconn.cn